Town of Yarmouth

Riverwalk Park and Boardwalk Feasibility/Concept Design Study

Project Number: 17-2-CD

Meeting - May 02, 2017

BETA

Trail/Path/Walkway

Crushed stone path through woodland and landscape restoration areas

Low Profile Boardwalk

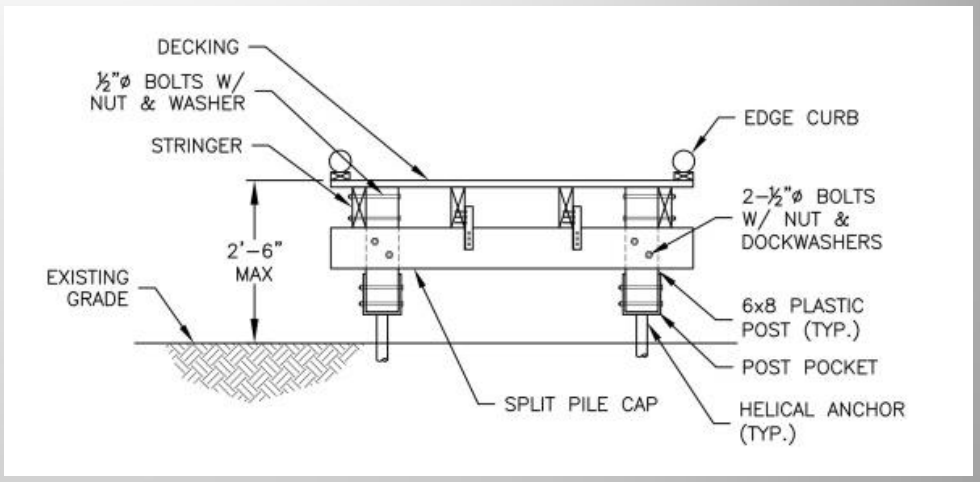

Section

Alternate to crushed stone path-Considers raising sea level. No railing required. Higher Cost.

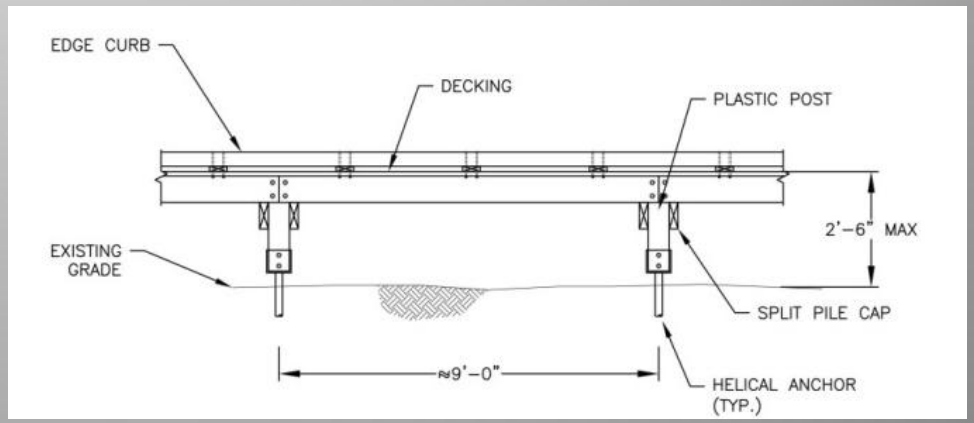

Elevation

Raised Boardwalk

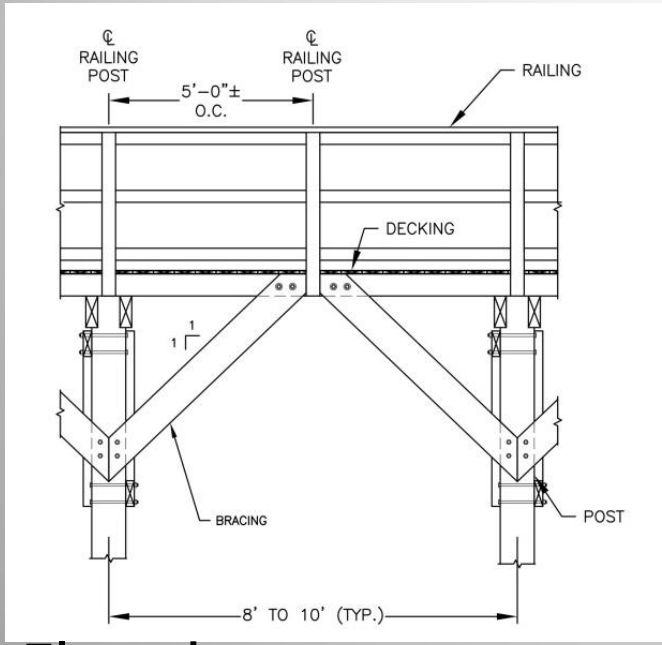

Elevation

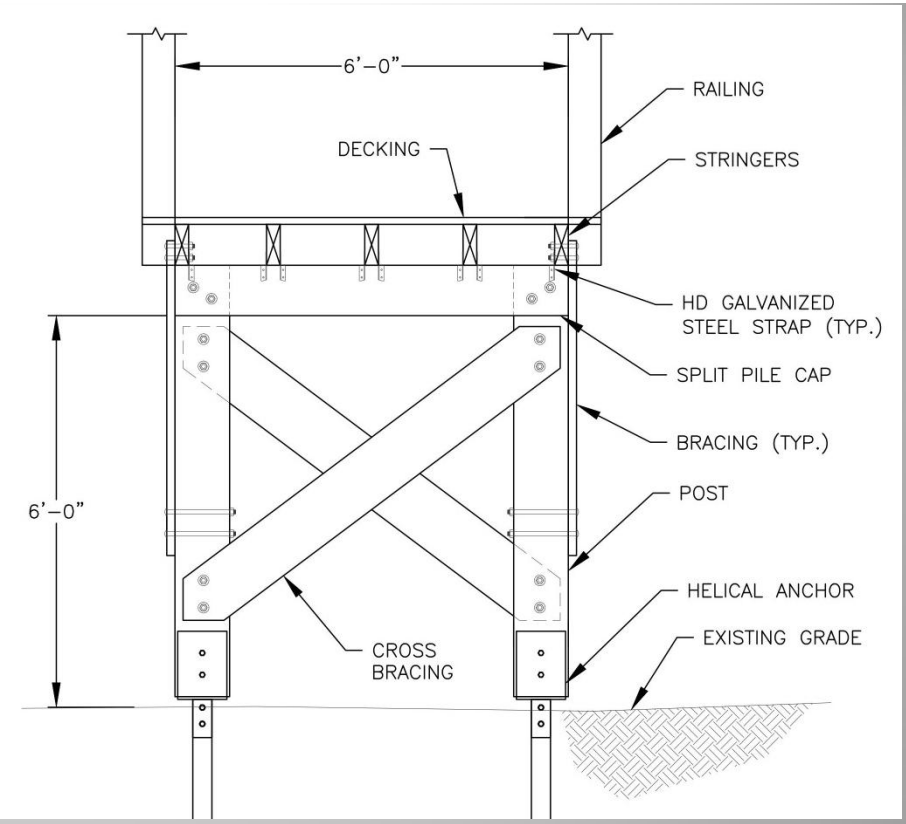

Section

Wood Boardwalk and Railing

Vertical Railing

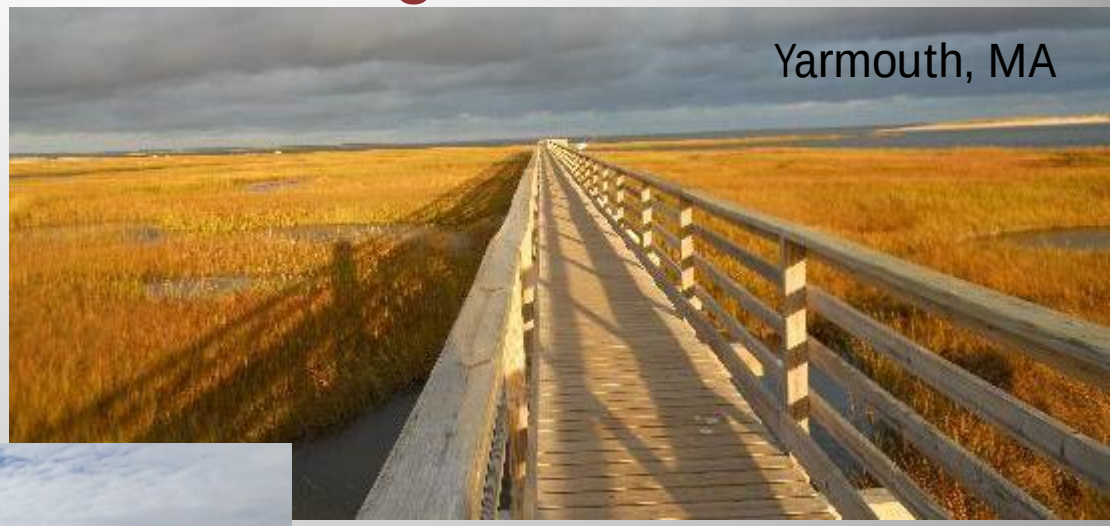

Angled Railing can give the impression of more room

Cable Railing

Wood post and top rail

Stainless steel or aluminum post and top rail

Fiberglass Grating for Boardwalk Decking

Grating at a Corner bump-out

Boardwalk Overlooks- Configurations

Corner bump-out

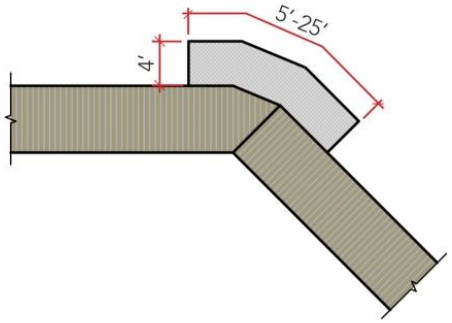

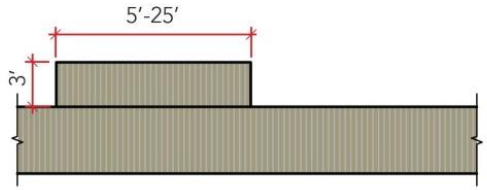

Side bump-out

Extension bump-out

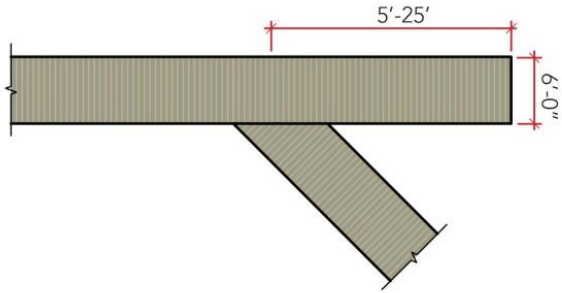

Side bump-out

Boardwalk Overlooks
Interpretation, Rest and Shade

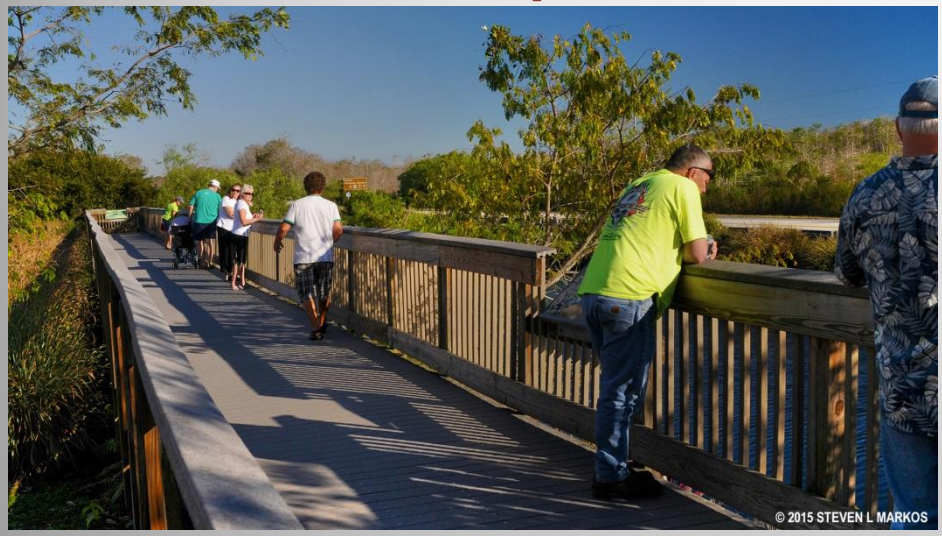

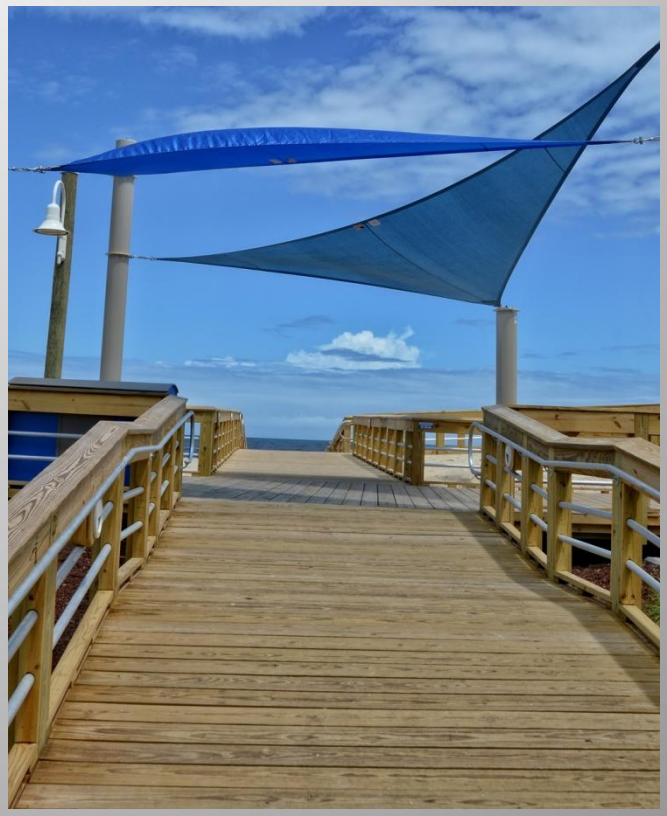

Extension bump-out

Boardwalk Options

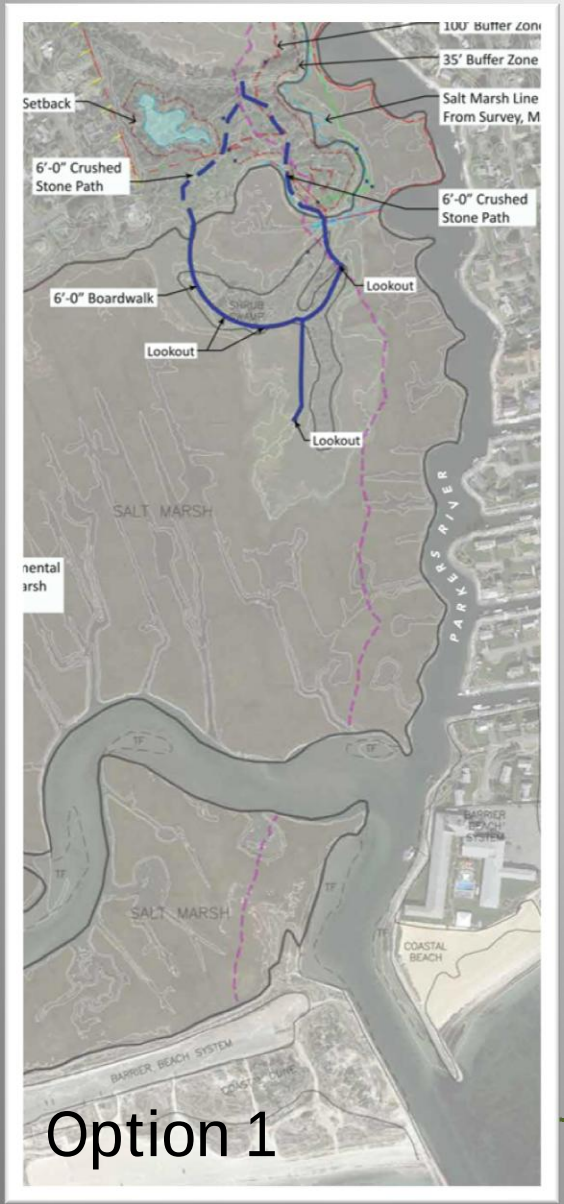

Option 1

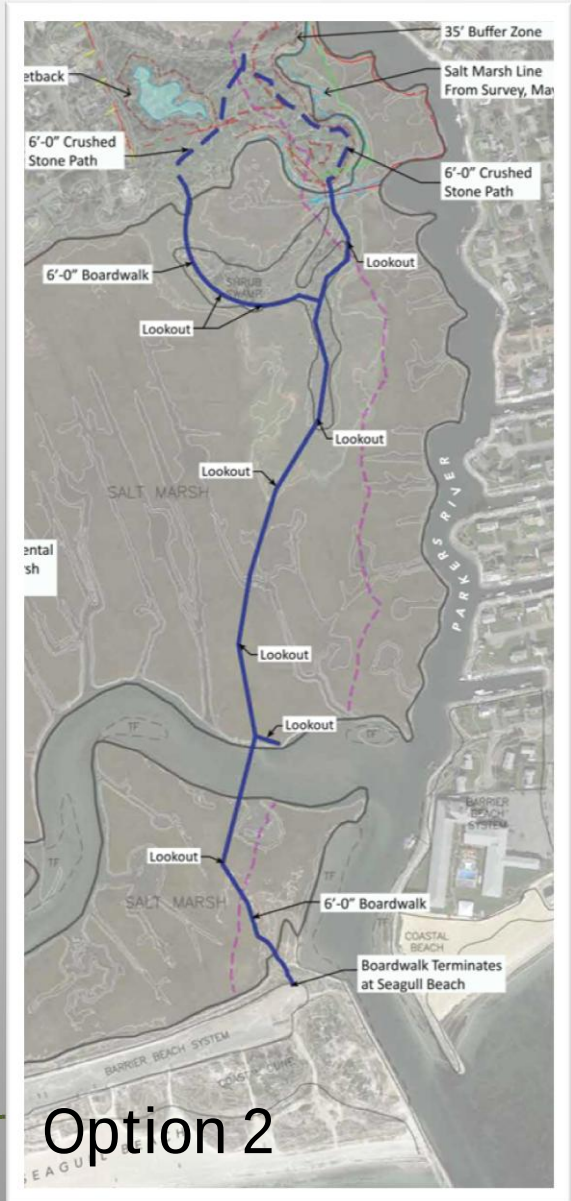

Option 2

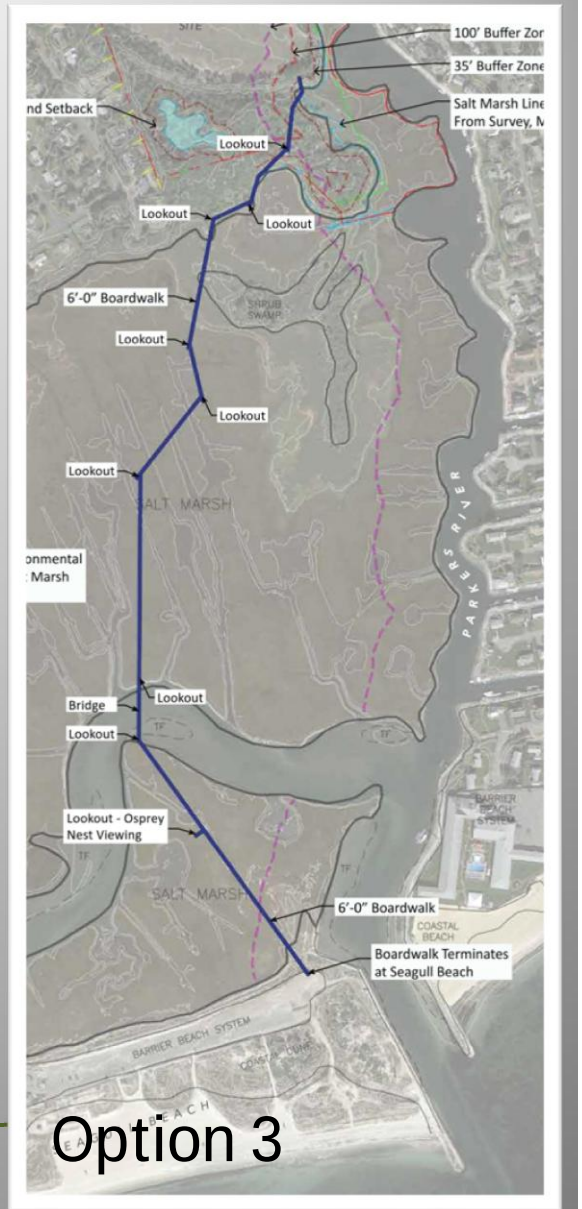

Option 3

Boardwalk - Key Design Issues

- Design Criteria
  - Pedestrian Loading
  - Vehicles – Gator utility vehicle/ golf cart
  - Flood Loads
  - ADA Compliance – Gradients, Material, Edge Protection, Kayak Launch
  - Wind, wave, geotechnical
- Boardwalk Height
  - FEMA Flood Elevations – VE Zone (+13 NAVD)
  - Chapter 91 requirements for clearances under structure
  - Sea level rise
  - Channel crossing
- Materials
  - Foundations – helical vs piles
  - Decking – tropical hardwood, composite, grating

Sandwich Boardwalk
Sandwich MA

Riverwalk Park Design Elements

Kayak Paddle Board Rental Options

Vendor Trailer

Kayak rental locker

Option for paddleboards

Lease storage space

Artist Shanty, Eco Huts
Rental Huts

Yarmouth Riverfront Park & Boardwalk

Pavilion and Shade Structures

Composting Toilets

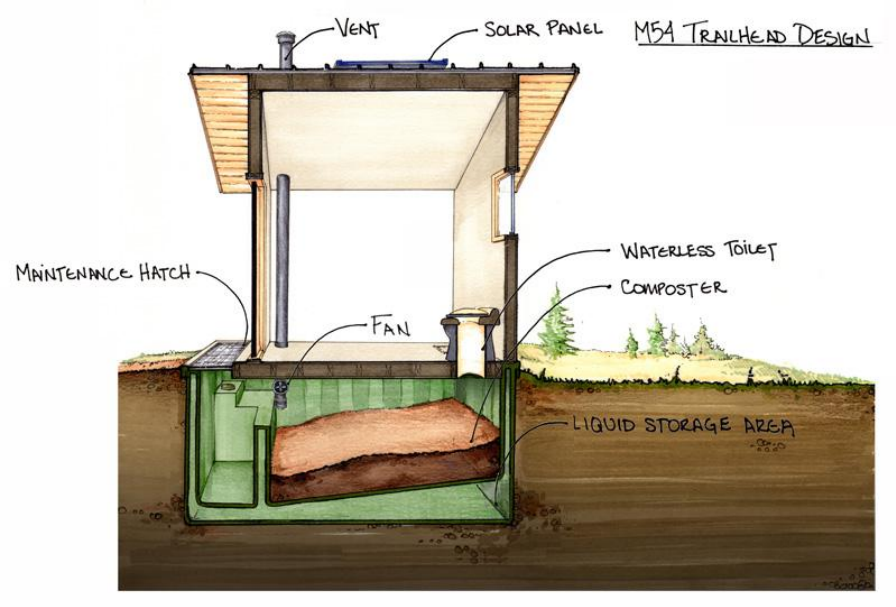

Pre-fabricated/Composting restrooms

- Self-contained waste treatment systems
- Emit no pollution
- Site disturbance minimized to the footprint of the buildings
- Traditional looking buildings.

Composting and Portable Toilets

Food Trucks

Joeys
KANGURU

Eat Well... On The Fly
TOMMY'S
MENU
Local Fish Taco
Porchetta Sandwich
Gourmet Hot Dog
sunbird

Butterfly Garden

ardwalk

Landscape Restoration

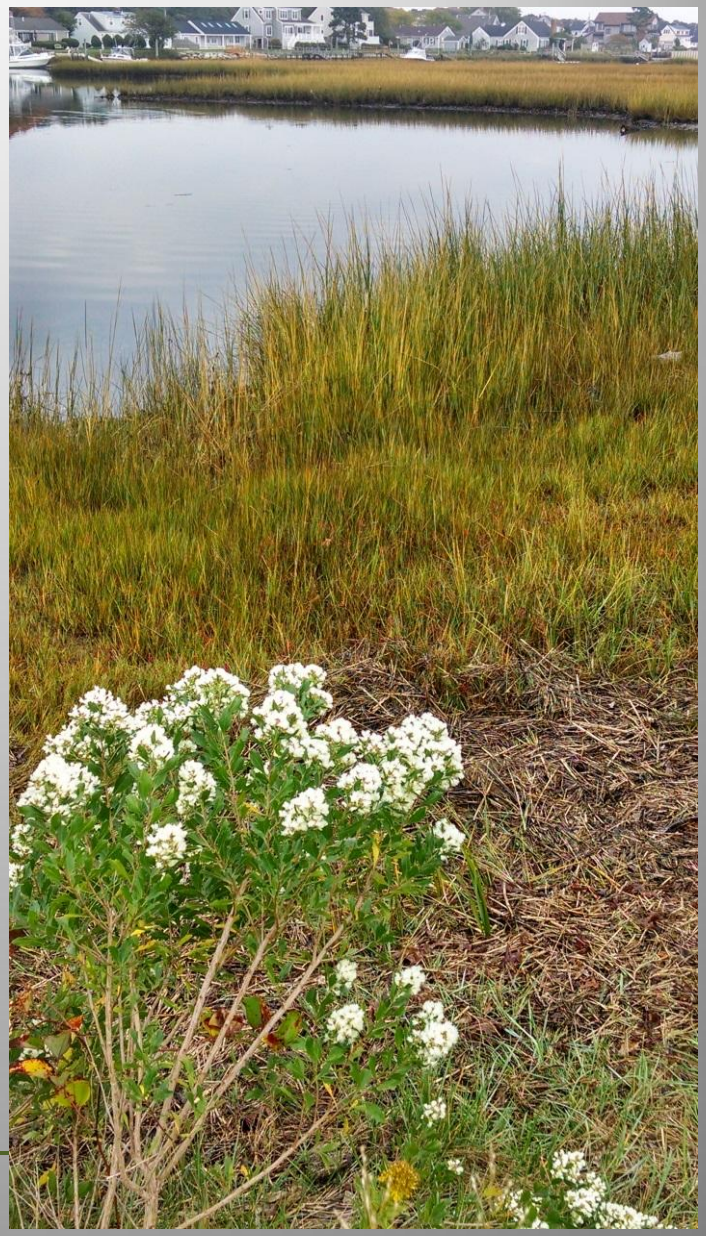

Green Infrastructure

Stormwater swales, rain gardens and pervious pavement

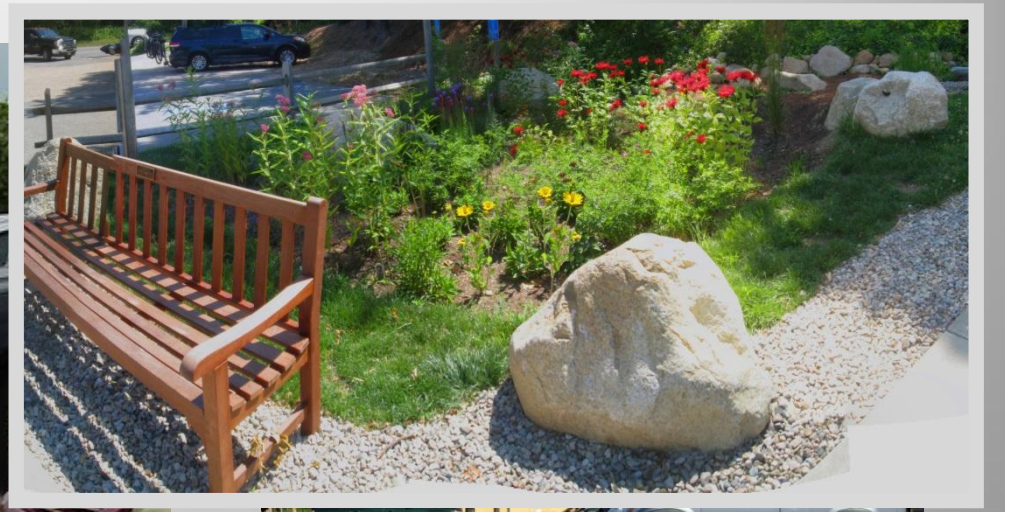

Riverwalk Park Options

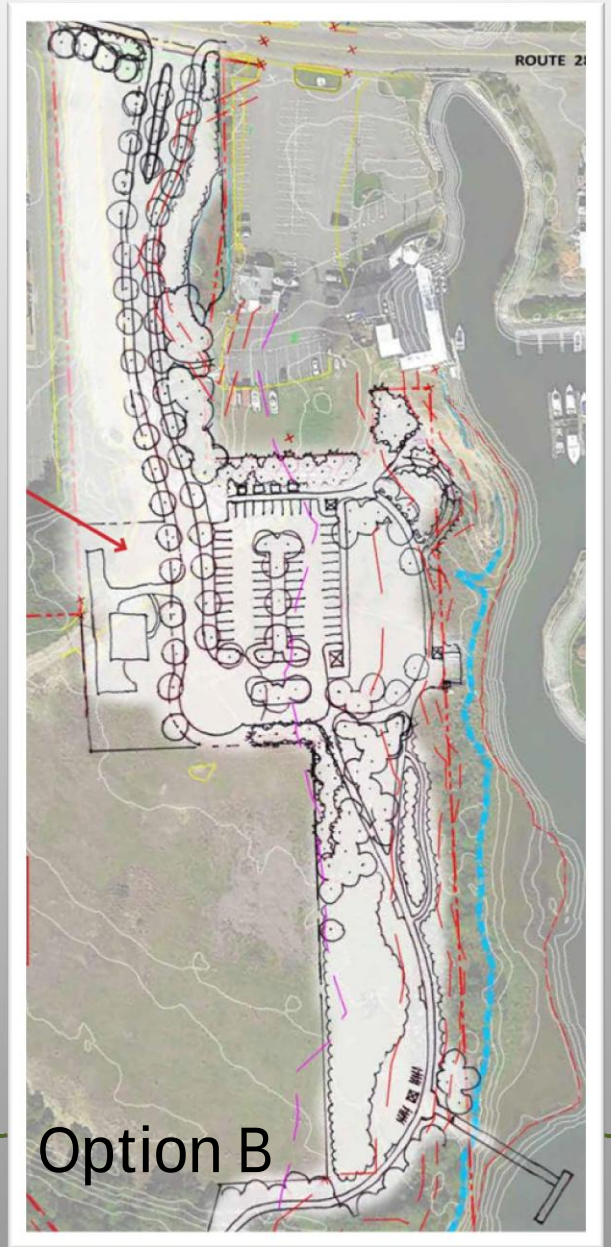

Riverwalk Park Options

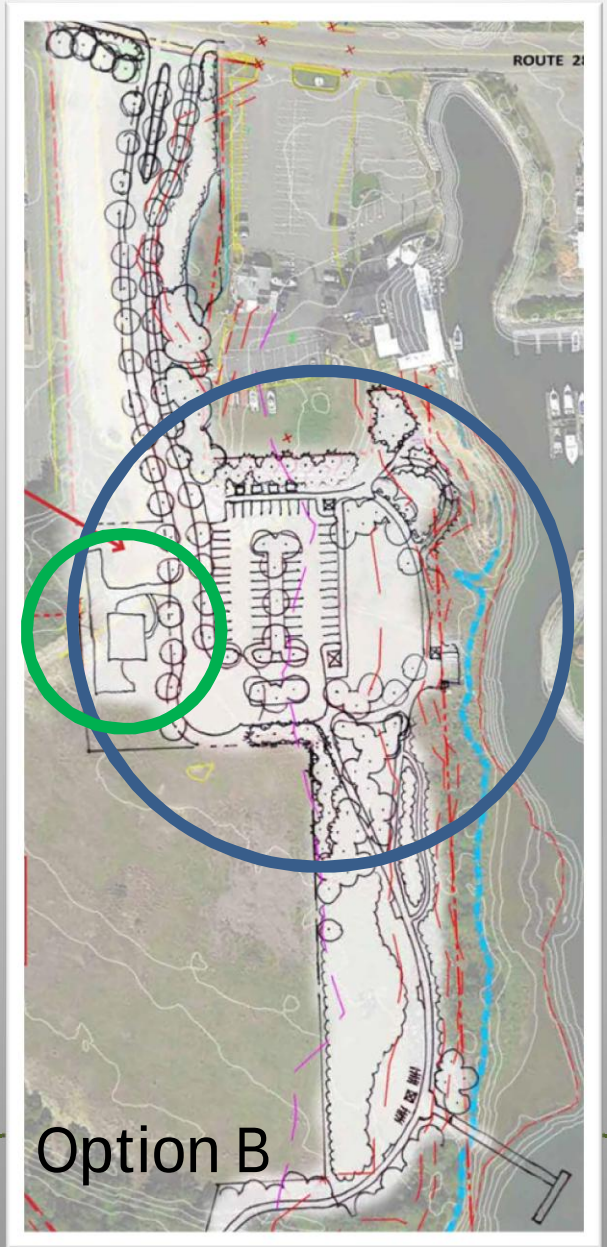
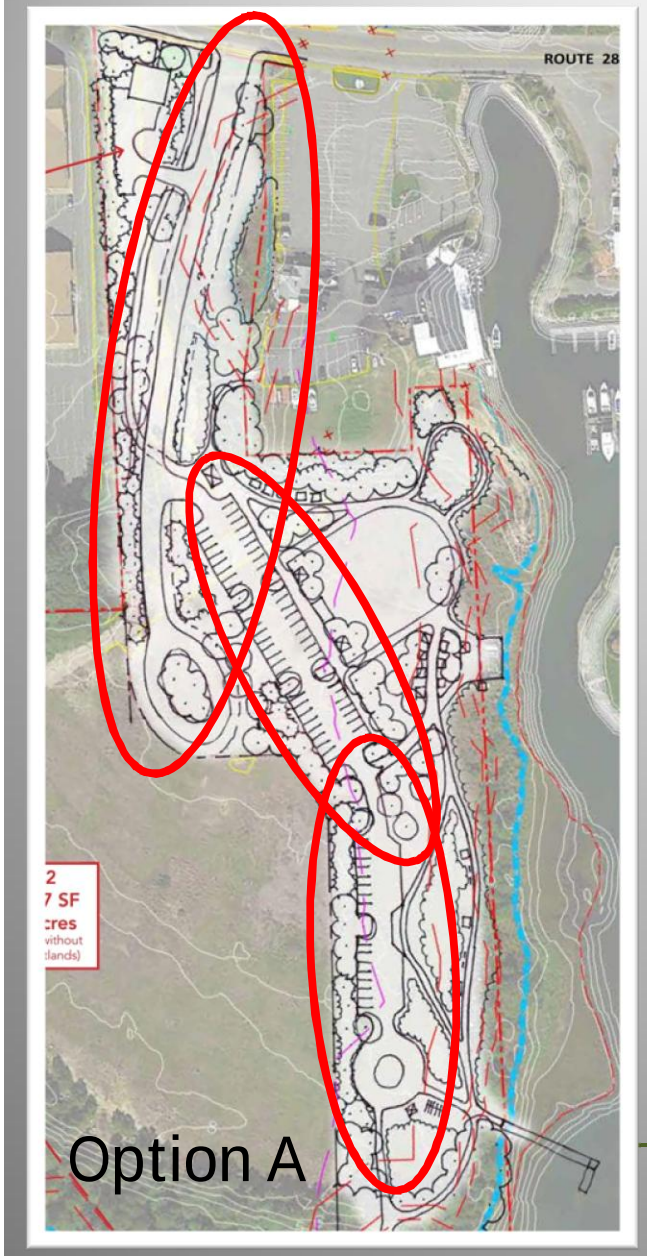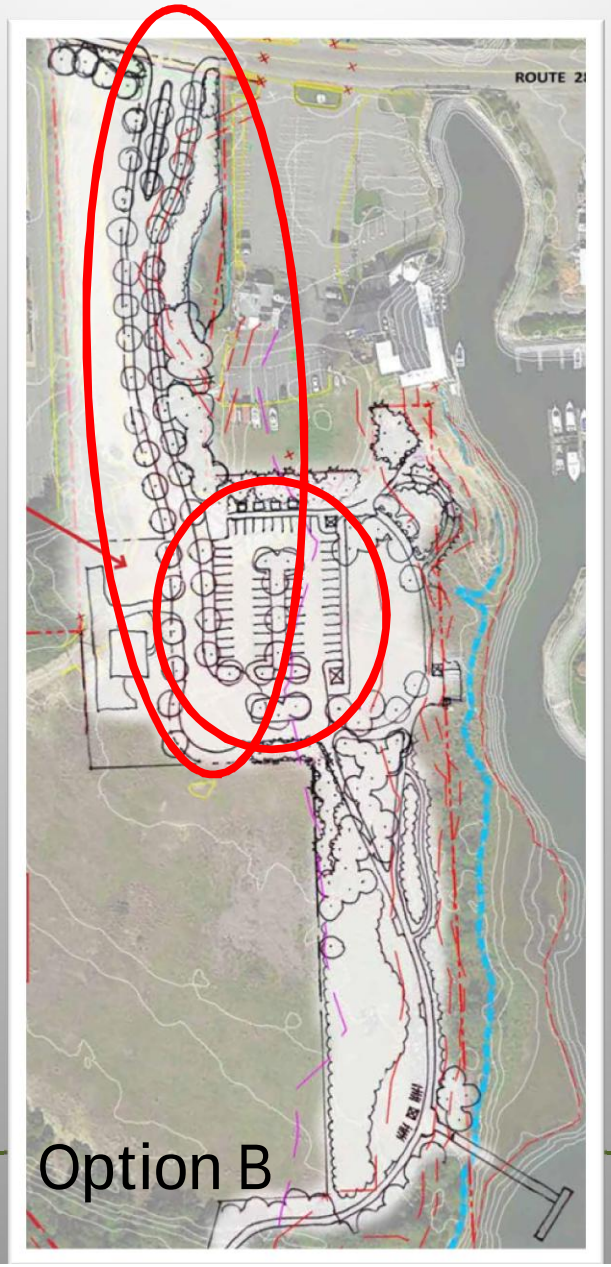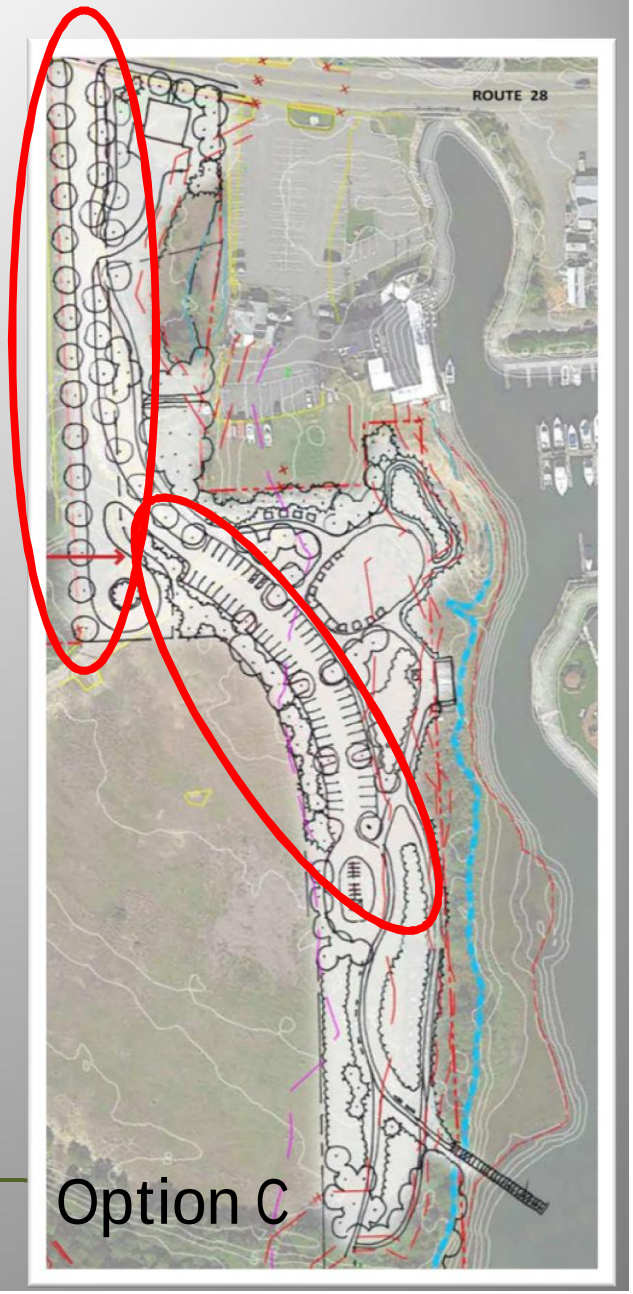
Riverwalk Park Options