Riverwalk Park Concept Plan

Riverwalk Park Amenities

Entrance Sign

Landscape Restoration & Butterfly Garden

Educational Opportunities

Events & Activities

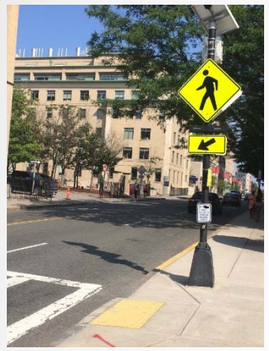

Pedestrian Beacon At Route 28

Elevated Walkway in Parking Lot

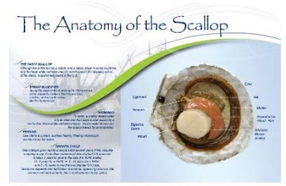

Seating Options

Decorative Lighting

Interpretive Signage

Interactive Natural Playscapes

Pervious Pavement & Curb Stops in Parking Lot

Shade Sails

Permeable pavement trails

Kayak Launch, Storage & Vendor Trailer

Public Art Displays

Bigbelly solar trash/recycling

Portable Toilet Enclosure (Dennis Pond)

Traditional Restrooms (Bass Hole)

Boardwalk Loop Concept Plan

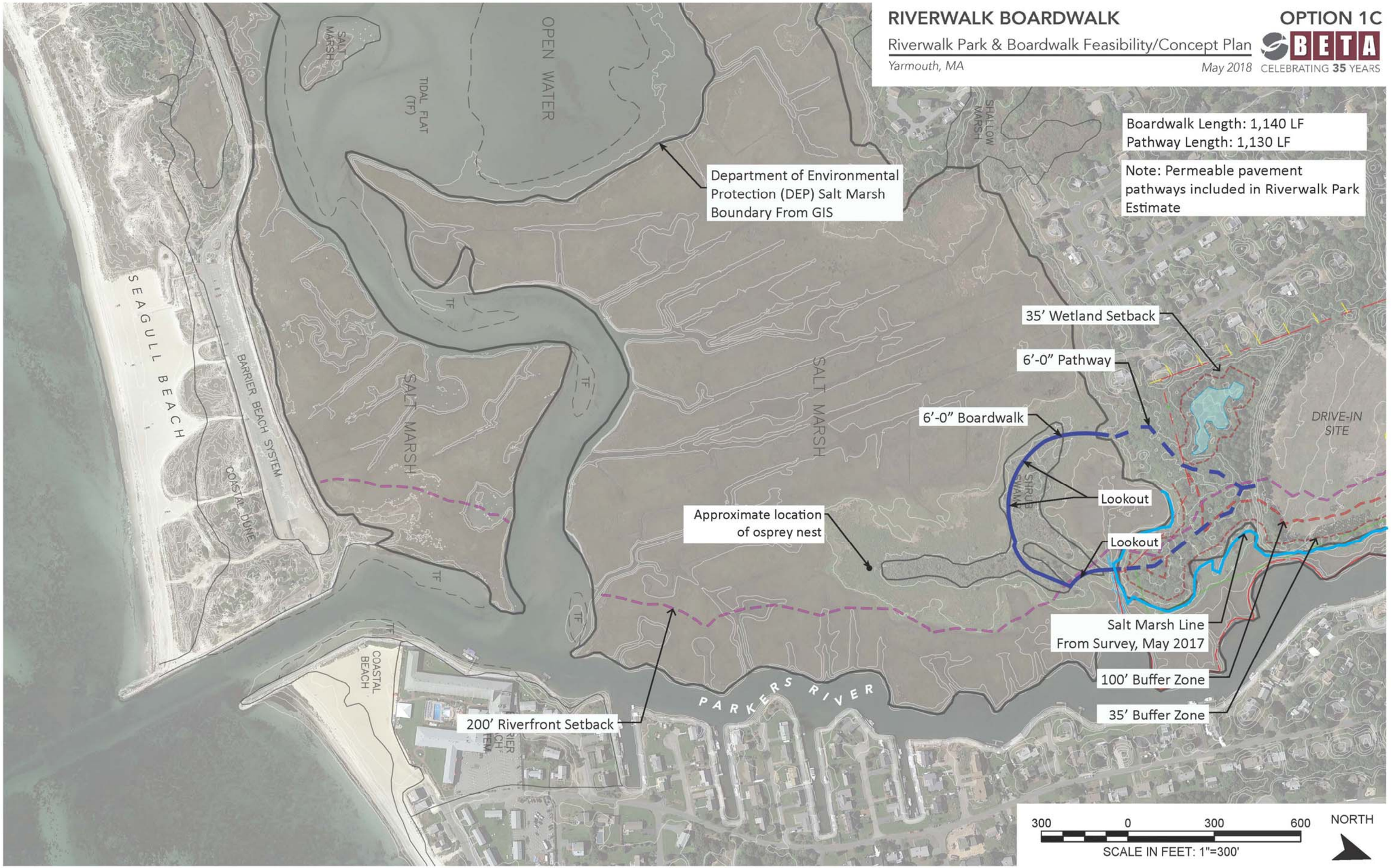

Boardwalk Amenities

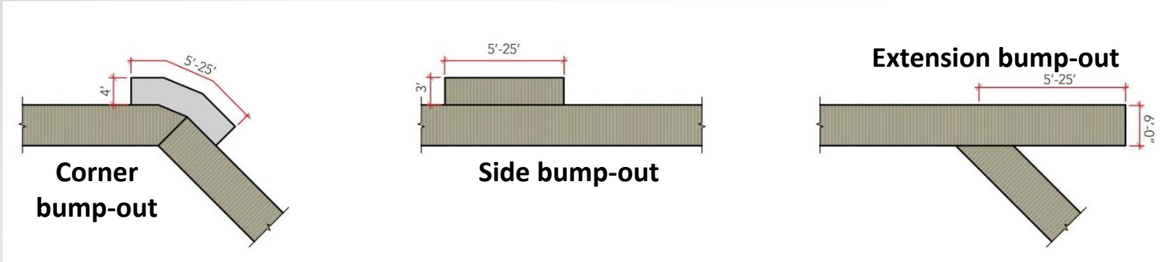

Side bump-out

Extension bump-out

Boardwalk Overlooks

Grating at a corner bump-out

IPE – Brazilian Hardwood

Donation naming

Boardwalk Decking Materials

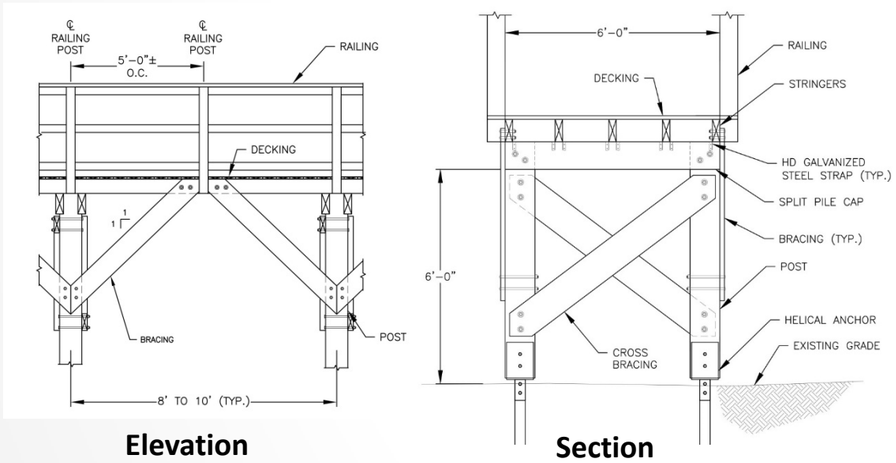

Elevation

Section

Raised Boardwalk

Boardwalk Overlook Interpretation

Angled Wooden Railing